# nPR+
## NANO- PROGRESSIVE REPLACEABLE

## CHARACTERISTICS

- OPERATES UP TO 300 BAR (4350 PSI)
- DIVIDES OIL OR GREASE
- DROPSA PATENT NPR+ - REPLACEABLE RAIL MOUNT SYSTEM ALLOWS EASE OF ASSEMBLY AND SUBSTITUTION OF AN ELEMENT WITHOUT COMPLETE DISASSEMBLY
- DROPSA PATENTED RIGID-LOCK MODULAR ELEMENT TECHNOLOGY GIVES MONO-BLOCK RIGIDITY TO A SEGMENTED BASE
- TOP OR SIDE OUTPUTS AS STANDARD
- SINGLE OR DUAL OUTLET SETTABLE BY CENTRAL PLUG
- FULL RANGE OF PRESSURE AND SPOOL MONITORING ACCESSORIES INTERCHANGEABLE WITH SMO PRODUCT LINE
- THE TWO OUTPUTS ARE COMBINED BY REPLACING THE ADAPTER. JUST TAKE ONE ITEM OF STOCK
- ASSEMBLING IS SIMPLE AND FLEXIBLE.
- BRIDGELEFT/RIGHT/BOTH ELEMENTS ELIMINATE THE NEED FOR EXTERNAL CROSS PORTING.
- DIFFERENT INLET MODULE WITH DIFFERENT HOLE-CENTERS FOR EASY INTERCHANGEBILITY
- ZINC-NICKEL PLATED STEEL

## APPLICATION

- MACHINE TOOLS
- TEXTILES
- ANY SMALL-MEDIUM OIL AND GREASE SYSTEMS

## METERING DIVIDER ELEMENTS FOR THE VOLUMETRIC DISTRIBUTION OF OILS AND GREASE

Dropsa's **nano-Progressive Replaceable + (nPr+)** dividers are the ideal solution for grease lubrication applications that require small and accurately dispensed quantities of lubricant in a compact and solid footprint. Thanks to a patented RigidLock novel interlocking mechanism between the elements **it has the rigidity of a mono-block divider but the flexibility of a modular segmented unit.**

**The nPr+**, uses the progressive movement of pistons to allow precise quantities of lubricant to be accurately dispensed to multiple points.

The lubrication cycle can be controlled by a single sensor, including the Dropsa solid state Ultrasensor product.

**nPr uses an innovative rail & lock concept to allow the element to be replaced or re-organized without the need to completely dismantle the assembly.** This is an industry first for segmented progressive dividers allowing quick easy modification or replacement of an assembly element without the cost of a separate base porting module.
The compactness makes them particularly suitable for use in confined spaces.
These metering elements may be used in a variety of system configurations and have different working configurations that make them flexible for use in multiple applications.

## OPERATING PRINCIPLE

The system can be easily extended and the modular concept provides low cost replacement of component.

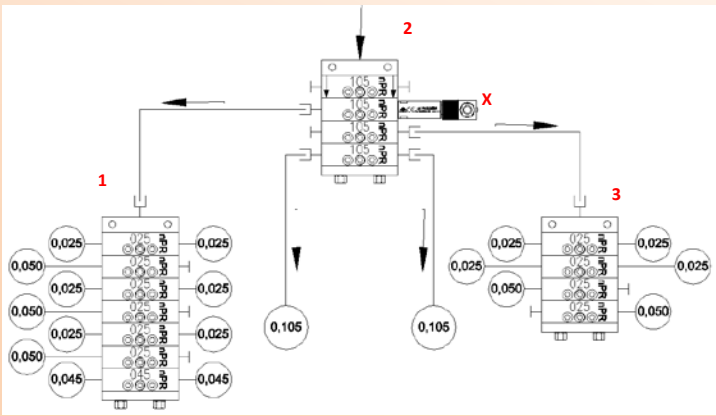


The **nPR+ 105** metering element (1) pilots a block of 6 metering 0,025 nPr delivering elements and one 0,045 nPr delivering element.

The **nPR+ 105** metering element (3) pilots a block of 3 0,025 nPr delivering elements and one 0,050 nPr delivering element.

The **nPR+ 105** metering element (2) directly lubricates two point of the machine.

The cycle is controlled by the Ultrasensor cycle indicator (X).

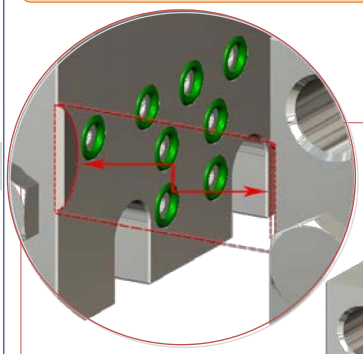

## RIGIDLOCK

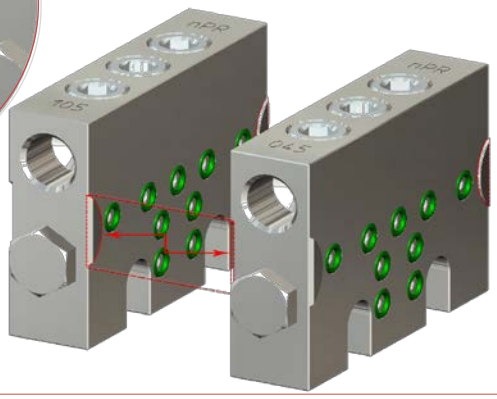

THE RIGIDLOCK SYSTEMS CREATE RIGID INTERLOCKING MECHANISMS BETWEEN THE ELEMENTS, VIRTUALLY ELIMINATING LEAKS TYPICALLY FOUND ON PREVIOUS SEGMENTED ELEMENTS CAUSED BY TORSION OR TENSION IN THE TUBING.

## ADVANTAGES

- By combining a reduced space-envelope and maintaining modularity in a single package the **nano-Progressive Replaceable** dividers offer many of the features found in top-of-line dividers at a fraction of the cost.
- The **RigidLock Systems** create rigid interlocking mechanisms between the elements virtually eliminating leaks typically found on previously segmented elements caused by torsion or tension in the tubing
- A full range of accessories and bridge elements allow for flexible engineering choices.

## TECHNICAL INFORMATION

| GENERAL CHARACTERISTICS | |
|---|---|
| **Singular outlet Flowrate** | 0.0015 cu.inch – 0.0027 cu.inch – 0.0045 cu.inch - 0.0064 cu.inch (0,025cm³ - 0,045cm³ - 0,075cm³ - 0,105cm³) |
| **Number of Divider elements** | 3 ÷ 12 |
| **Working pressure** | 15bar (218psi) ÷ 300bar (4350psi) |
| **Working temperature** | -20°C ÷ +80°C |
| **Material** | Zinc-Nickel plated steel |
| **Number of inversions per minute** | 200 max. |
| **Inlet thread** | G1/8" – UNI ISO 228/1 |
| **Outlet thread** | G1/8" – UNI ISO 228/1 |
| **Lubricants** | Min. Oil. 32 cSt –max. 2 NLGI grease |

N.B.: The pressure is directly proportional to the number of cycles.
The oil and grease viscosity values always refer to the operating temperature.

## DIMENSIONS

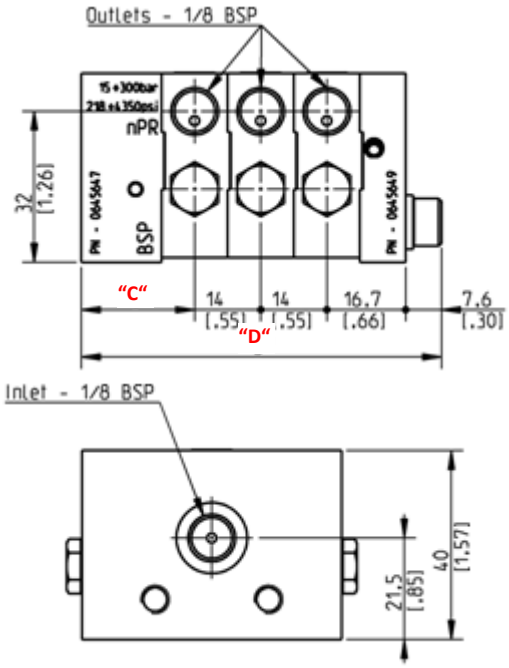


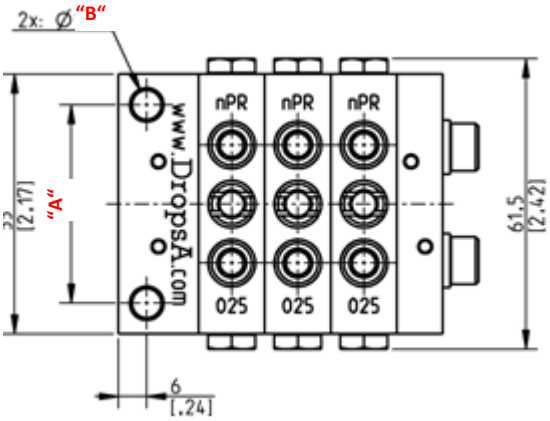


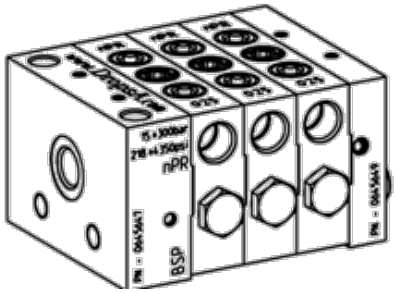

| | *INLET nPr* – standard version *mm [inch]* | | | | *INLET nPr -S* 20mm reduced hole centers *mm [inch]* | | | |
|---|---|---|---|---|---|---|---|---|
| N° elements | "A" | "B" | "C" | "D" | "A" | "B" | "C" | "D" |
| *3* | *42 [1.65]* | *6.2 [.24]* | *24 [.94]* | *76.3 [3]* | *20 [.79]* | *5.5 [.22]* | *30.5 [1.2]* | *82.8 [3.26]* |
| *4* | | | | *90.3 [3.55]* | | | | *96.8 [3.82]* |
| *5* | | | | *104.3[4.11]* | | | | *110.8 [4.36]* |
| *6* | | | | *118.3 [4.66]* | | | | *124.8 [4.91]* |
| *7* | | | | *132.3 [5.21]* | | | | *138.8 [5.46]* |
| *8* | | | | *146.3 [5.76]* | | | | *152.8 [6.02]* |
| *9* | | | | *160.3 [6.31]* | | | | *166.8 [6.57]* |
| *10* | | | | *174.3 [6.86]* | | | | *180.8 [7.12]* |
| *11* | | | | *188.3 [7.41]* | | | | *194.8 [7.67]* |
| *12* | | | | *202.3 [7.96]* | | | | *208.8 [8.22]* |

# nPR+
## NANO- PROGRESSIVE REPLACEABLE

## CONFIGURATION INFORMATION

**IN A FEW STEPS YOU CAN COMPOSE DIFFERENT KINDS OF MODULES AS NEEDED:**

### 1. INLET ELEMENT

| STANDARD ELEMENT | -S 20mm reduced |
|---|---|
| 0645647 | 0645648 |

### 2. DIVIDER ELEMENT

| FLOWRATE Q.cm³ | STANDARD ELEMENT | ELEMENT WITH INDICATOR | BRIDGE ELEMENT | | |
|---|---|---|---|---|---|
| | | | LEFT | RIGHT | LEFT/ RIGHT |
| 0,025 | 0645650 | 0645678 | 0645654 | 0645658 | 0645662 |
| 0,045 | 0645651 | 0645679 | 0645655 | 0645659 | 0645663 |
| 0,075 | 0645652 | 0645680 | 0645656 | 0645660 | 0645664 |
| 0,105 | 0645653 | 0645681 | 0645657 | 0645661 | 0645665 |

### 3. END ELEMENT

| PART NO. |
|---|
| 0645649 + 0016050 (Ø6 washer) |

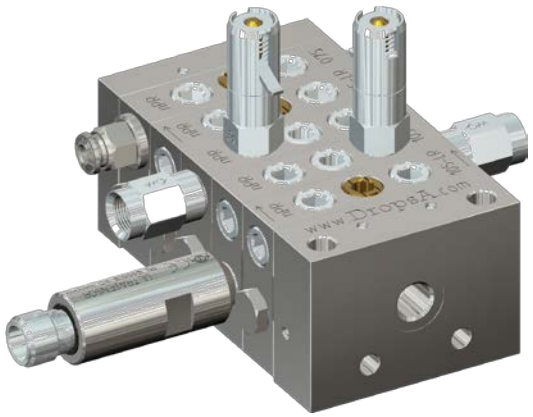

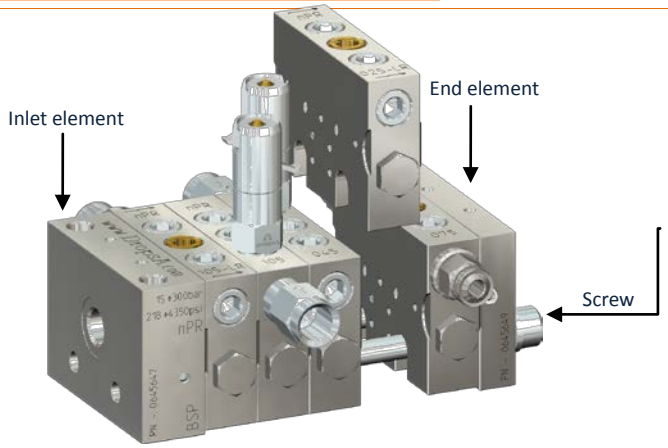


### 4.FITTINGS

| ITEM | DESCRIPTION | PART N. |
|---|---|---|
| PRESSSURE INDICATOR | *30bar* with memory pin | *3290000* |
| | *50bar* with memory pin | *3290001* |
| | *75bar* with memory pin | *3290022* |
| | *100bar* with memory pin | *3290002* |
| | *150bar* with memory pin | *3290003* |
| | *200bar* with memory pin | *3290004* |
| | *250bar* with memory pin | *3290005* |
| | *300bar* with memory pin | *3290021* |
| | 20bar with pin | *3290019* |
| | 30bar with pin | *3290006* |
| | 50bar with pin | *3290007* |
| | 100bar with pin | *3290008* |
| | 150bar with pin | *3290009* |
| | 200bar with pin | *3290010* |
| | 250bar with pin | *3290011* |
| | 30 bar with membrane | *3290012* |
| | 50 bar with membrane | *3290013* |
| | 100 bar with membrane | *3290014* |
| | 150 bar with membrane | *3290015* |
| | 200 bar with membrane | *3290016* |
| | 250 bar with membrane | *3290017* |
| CYCLE INDICATOR | ULTRASENSOR + (M12 Connector) | *1655308 + 0039999* |

| ITEM | DESCRIPTION | PART N. |
|---|---|---|
| *FITTINGS* | *1/8" valved fitting for OUTLETS* | *0092335* |
| | *1/8" valved fitting for INLET* | *0092555* |
| | *Ø6* Compression Fittings *(150bar)* | 0092080 |
| | *Ø4* Compression Fittings *(150bar)* | 0092069 |
| | *Ø4* ring fitting *(250bar)* | *3084577* |
| | *Push-in Ø4 (65bar)* | 3084578 |
| | *Push-in Ø6 (65bar)* | 3084696 |
| | *Swivel Push-in 90° Ø6 (150bar)* | *3084695* |
| | *Swivel Push-in 90° Ø4 (150bar)* | *3084696* |
| *TUBING* | *Ø6x1 Drawn steel tube (400bar)* | *5119812* |
| | *Ø4x1 Drawn steel tube (500bar)* | *5119832* |
| | *ASTM Ø6x0,71 Copper steel tube (310bar)* | *5118001* |
| | *ASTM Ø4x0,71 Copper steel tube (500bar)* | *5118000* |
| | *Ø4x0,5 Annealed copper tube (133bar)* | *5501201* |
| | *Ø6x1 Annealed copper tube (200bar)* | *5501203* |
| | *PA Ø4xØ2,5 Tube (60bar)* | *5717202* |
| | *PA Ø6xØ4 Tube (50bar)* | *5717203* |
| SCREWS order 2 per assembly | *3 elements* | *0014301* |
| | *4 elements* | *0014302* |
| | *5 elements* | *0014303* |
| | *6 elements* | *0014304* |
| | *7 elements* | *0014305* |
| | *8 elements* | *0014306* |
| | *9 elements* | *0014307* |
| | *10 elements* | *0014308* |
| | *11 elements* | *0014309* |
| | *12 elements* | *0014310* |

| ITEM | DESCRIPTION | PART N. |
|---|---|---|
| Washer (2 pieces for each assembled) | Ø6 washer | *0016050* |
| Plug with adapter | Single-output adapter | *0641708* |
| | Plug /wheat 1/8 BSP | *3232124* |

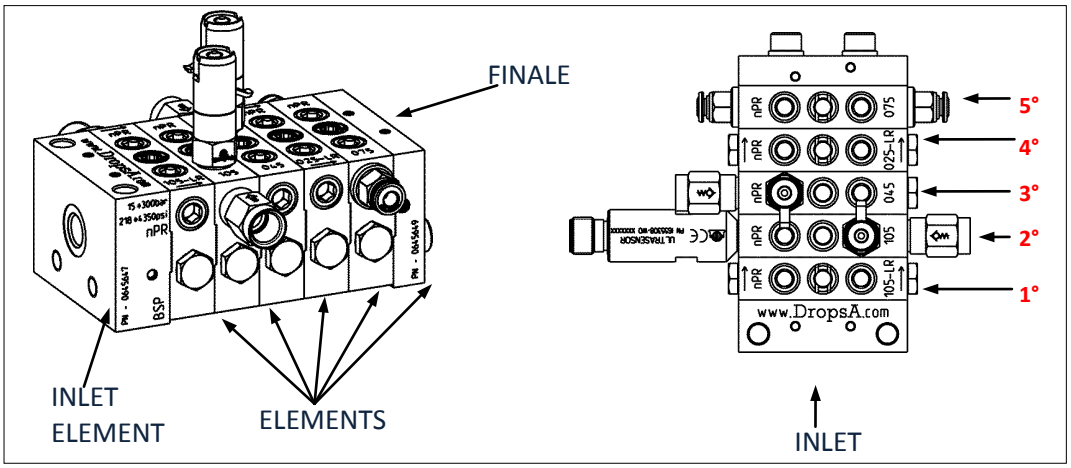


**Note:** to determine the left and right outlets, take note that the assembly is seen vertically and metering elements are numbered sequentially starting from the bottom (inlet).

**Indicate the full string of the package as in the following ordering example:**

*nPR+5* — *105 BLR – 105 SR USL M 75 R OC8BK – 045 SL M 100 L OC8BK – 025 BLR – 075 OP4*

1° 2° 3° 4° 5°

| Config. INIZIAL and PACK | | |
|---|---|---|
| TYPE | INIZIAL | N° ELEMENTS |
| ***nPr*** | ***Empty*** Standard Hole centers 42mm | ***3÷12*** |
| | ***S*** Reduced Hole center 20mm | |

| ELEMENT configuration (repeat for N° element) | | | | | | |
|---|---|---|---|---|---|---|
| FLOWRATE [cm³] | OUTLET | CYCLE CONTROL | PRESSURE COTROL | | | OUTLET FITTINGS |
| | | | TYPE | PRESSURE [bar] | POSITION | |
| ***025*** 0,025 | ***Empty*** both | ***US*** Ultrasensor right side | ***M*** with memory rod | ***30-50-75 100-150-200 250-300*** | ***L*** left | ***OP4*** Ø4 Push-in |
| ***045*** 0,045 | ***SL*** single left | ***USL*** Ultrasensor left side | ***P*** with rod | ***20-30-50 100-150 200-250*** | ***R*** right | ***OP6*** Ø6 Push-in |
| ***075*** 0,075 | ***SR*** single right | ***V*** visual right side | ***B*** with membrane | ***30-50 100-150 200-250*** | ***LR*** let right | ***OC8BK*** 1/8" BSP valved |
| ***105*** 0,105 | ***BL*** bridge left | ***VL*** visual left side | | | ***UL*** *Single left upper* | ***OC8NK*** 1/8" NPT valved |
| | ***BR*** bridge right | | | | ***UR*** *Single right upper* | |
| | ***BLR*** bridge left & right | | | | ***URL*** *Single right & left upper* | |
| | ***U*** *Both Upper* | | | | | |
| | ***UL*** *Single left upper* | | | | | |
| | ***UR*** *Single right upper* | | | | | |

## SINGLE AND DOUBLE OUTLET CONVERSION

It is possible to double the delivery of a single element by replacing the yellow Adapter Part No. 0642015 and O-ring Part No. 641791 with the white Adapter Part No. 0641708 as shown in the drawing below. When converted into single, plug off the second outlet with a plug Part No. 3232098

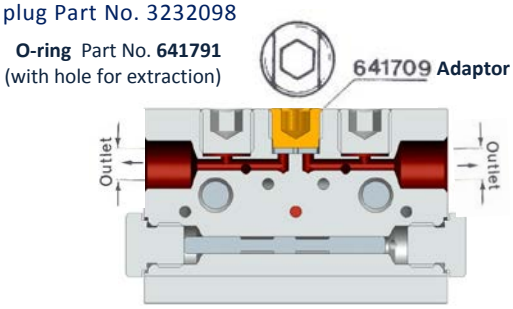


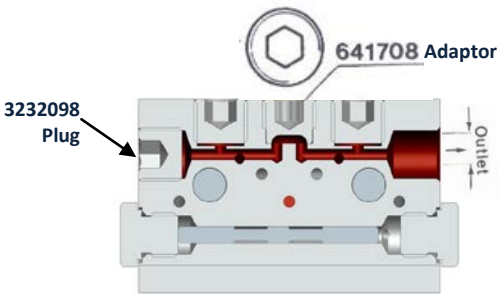


Info Distributor:



Dropsa products can be purchased from Dropsa subsidiary and Dropsa sales representatives, visit **www.dropsa.com/contact** or contact us **sales@dropsa.com**